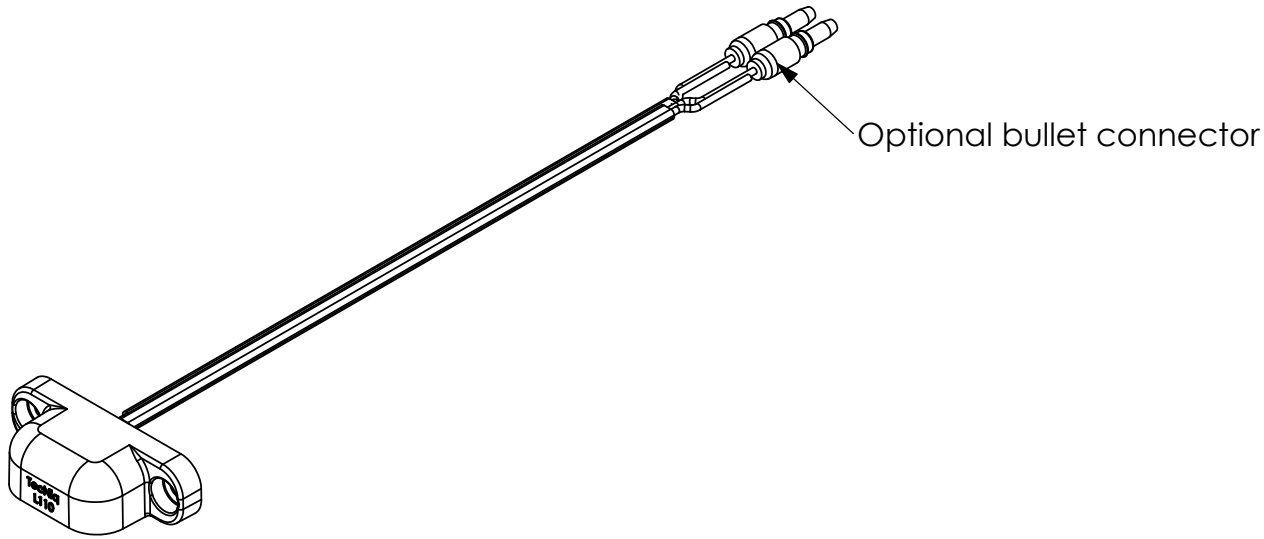

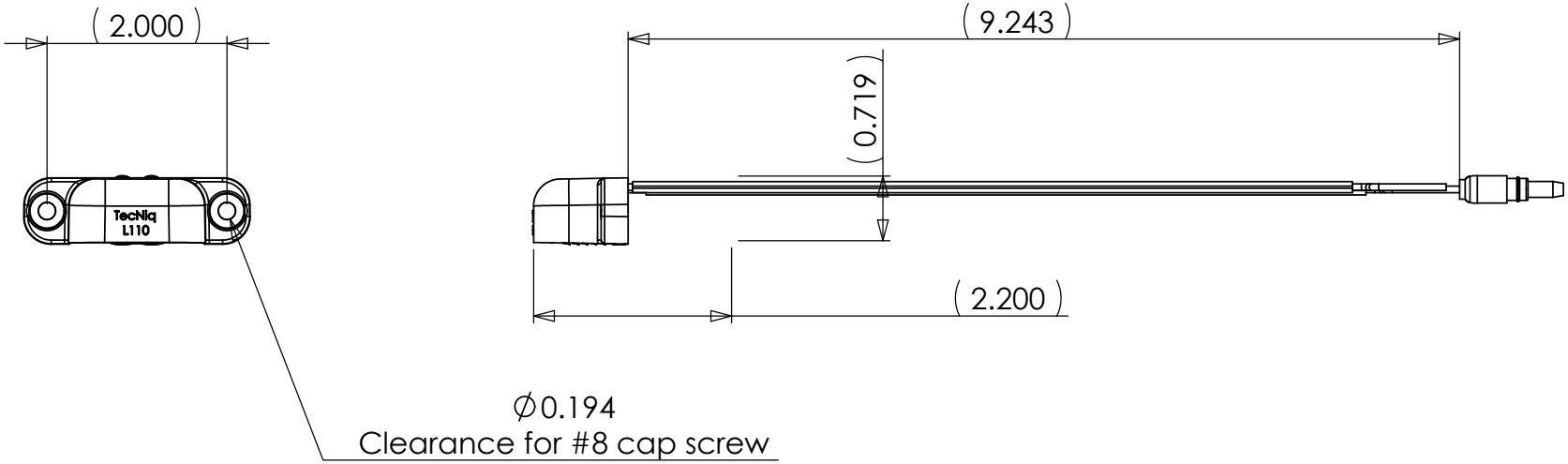

TECNIQ INC.

L110 Model License Lamp

DWG. NO.