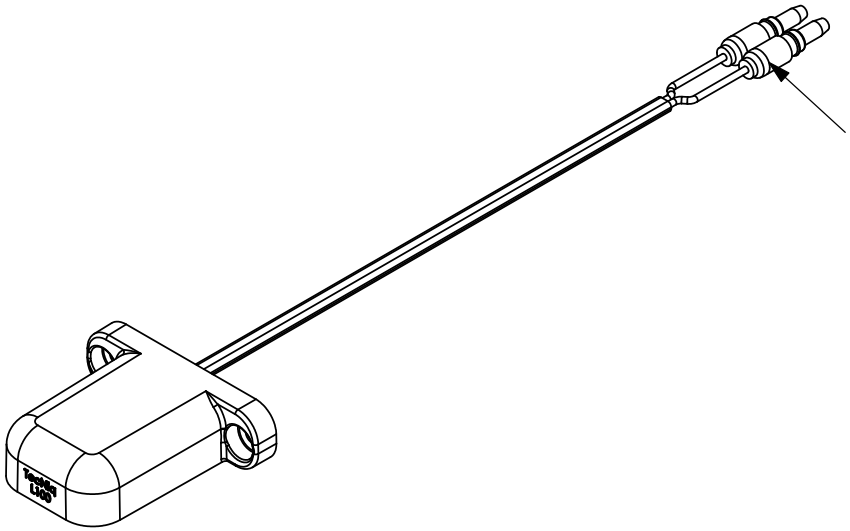

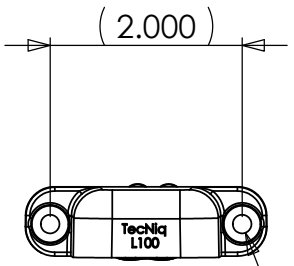

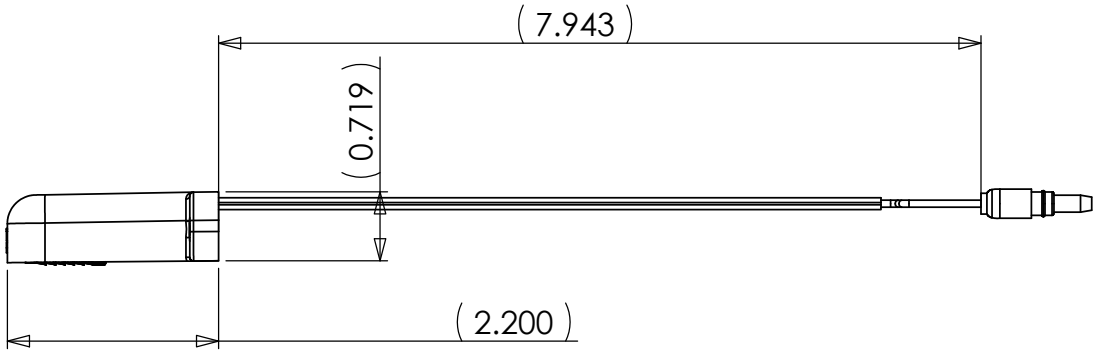

∅0.194
Clearance for #8 cap screw

TECNIQ INC.

L100 Model License Lamp