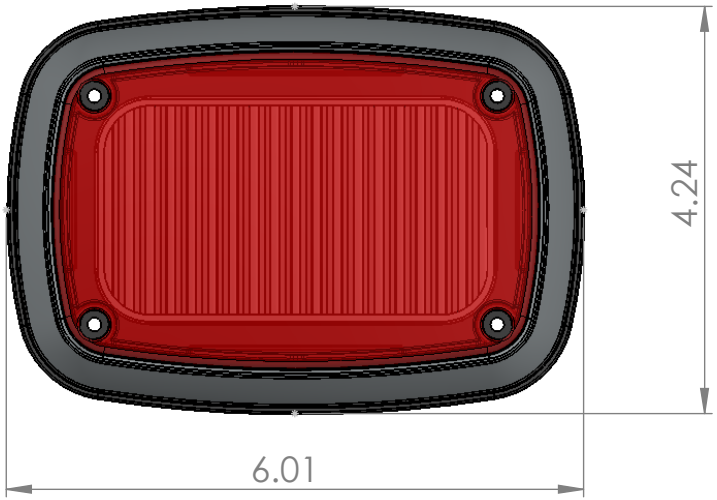

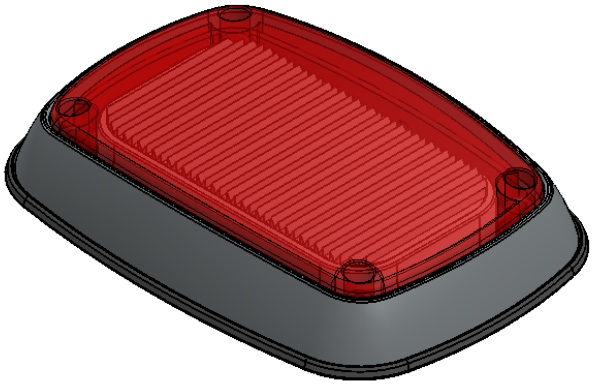

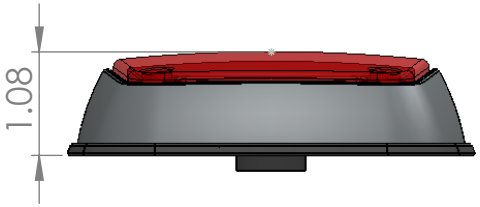

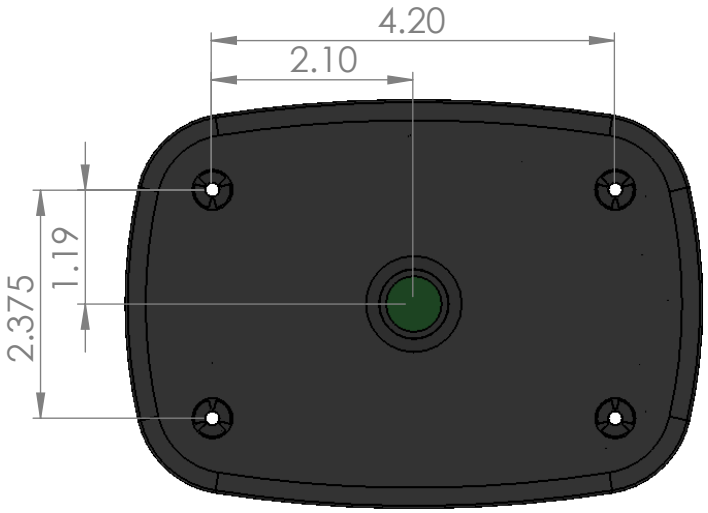

1" CENTER HOLE
13/64 ANCHOR HOLES

TecNiq inc

K40

DWG. NO.		REV. A
SCALE 1	CAD FILE:	SHEET 1 OF 1