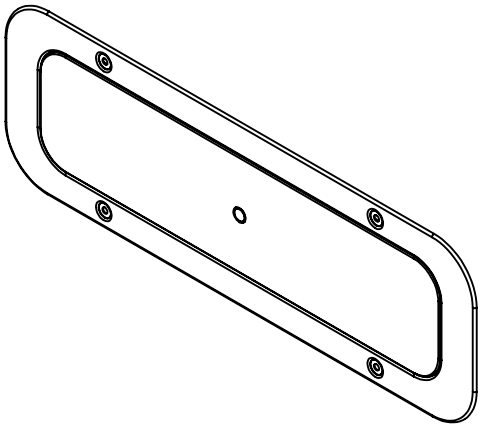

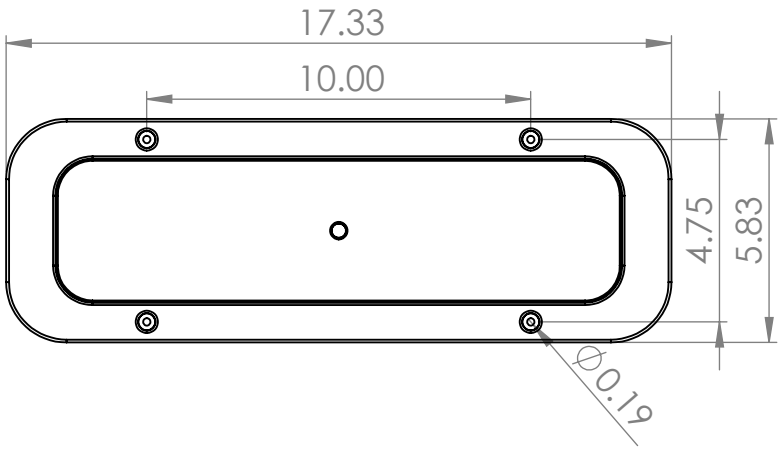

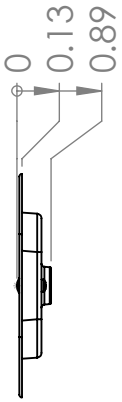

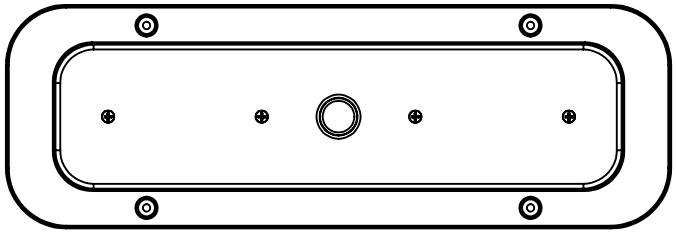

TecNiq inc

REV. A

SHEET 1 OF 2

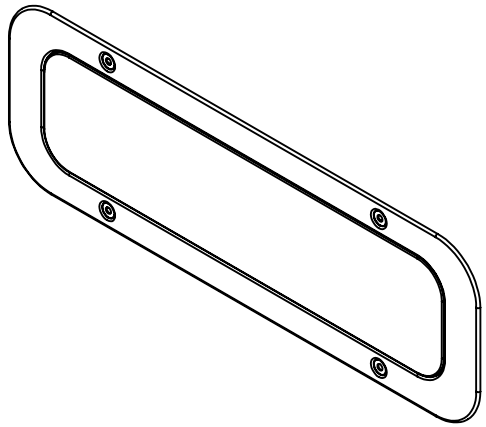

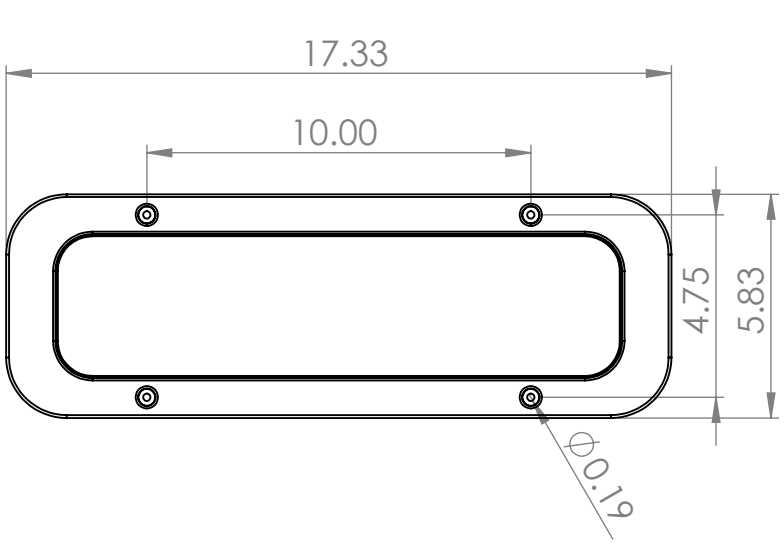

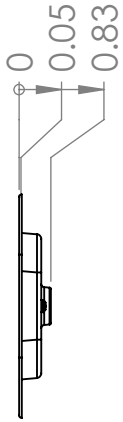

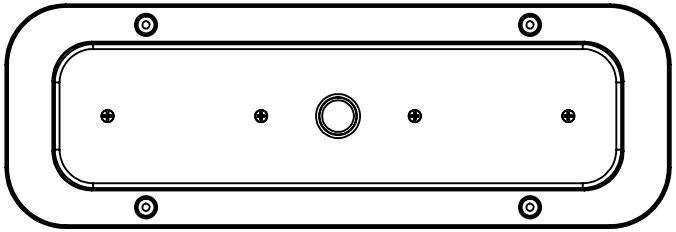

TecNiq inc

REV. A

SHEET 2 OF 2